BRUCE'S CUSTOM COVERS
A division of Aircraft Covers, Inc.

18850 Adams Ct
Morgan Hill, CA 95037
www.AircraftCovers.com

Phone: 408/738-3959
Toll Free (U.S.): 800/777-6405
Fax: 408/738-2729
Email: bruce@aircraftcovers.com

manufacturer of the finest custom-made aircraft covers

Tech Sheet: Spirit Engineering SE-1

(spirit-engineering-SE1.pdf)

Blackshape Prime Canopy Cover

Section 1: Canopy/Cockpit/Fuselage Covers

Canopy Covers help reduce damage to your airplane's upholstery and avionics caused by excessive heat, and they can eliminate problems caused by leaking door and window seals. They keep the windshield and window surfaces clean and help prevent vandalism and theft.

The **Spirit Engineering SE-1 Canopy Cover** is designed to enclose the windshield, all side windows and canopy roof. The Canopy Cover is custom designed for each model, as well as your aircraft's specific antenna and temperature probe placements. The Canopy Cover attaches using adjustable "belly straps", which run under the belly and connect to the other side of the cover with a quick-release plastic buckle. To ensure the most secure fit, high-quality shock cord is enclosed in the hem of the cover to help keep the cover tighter against the airplane. Canopy Covers are commonly referred to as Cabin Covers, Fuselage Covers, Canvas Covers, Canopy Caps, etc.

Each Canopy Cover is custom sewn and the corners are trimmed to match the colors of the airplane. The airplane's registration number can be imprinted onto both sides of the cover for an additional charge. A duffle bag is included with all Canopy Covers.

This cover type is made from Silver Acrylic Sunbrella canvas and is 100% lined with a soft and smooth microfiber. Bruce's Custom Covers developed this material combination especially for aircraft protection. The outer material is medium weight and treated for water resistance, UV resistance and anti-static buildup. The inner lining is a very soft and smooth microfiber to prevent scratching. The material is very reflective, and tests show that the cabin interior temperature can be reduced to near-ambient temperature on the hottest of days. It is water, ice and snow repellent, yet breathable to allow moisture to escape from between the cover and the aircraft surface.

The **Spirit Engineering SE-1 Canopy/Engine Cover** is a one-piece cover (100% lined with microfiber) that is a combination of the Canopy Cover and Engine Cover. This cover will enclose the engine cowl and will extend aft to cover all of the windows. This cover type is made from Silver Acrylic Sunbrella canvas and is 100% lined with a soft and smooth microfiber. Bruce's Custom Covers developed this material combination especially for aircraft protection. The outer material is medium weight and treated for water resistance, UV resistance and anti-static buildup. The inner lining is a very soft and smooth microfiber to prevent scratching. The material is very reflective, and tests show that the cabin interior temperature can be reduced to near-ambient temperature on the hottest of days. It is water, ice and snow repellent, yet breathable to allow moisture to escape from between the cover and the aircraft surface.

The **Spirit Engineering SE-1 Complete Fuselage Cover** is designed to cover the entire airplane from the engine cowling to the tail.

This cover type is made from Silver Acrylic Sunbrella canvas and is 100% lined with a soft and smooth microfiber. Bruce's Custom Covers developed this material combination especially for aircraft protection. The outer material is medium weight and treated for water resistance, UV resistance and anti-static buildup. The inner lining is a very soft and smooth microfiber to prevent scratching. The material is very reflective, and tests show that the cabin interior temperature can be reduced to near-ambient temperature on the hottest of days. It is water, ice and snow repellent, yet breathable to allow moisture to escape from between the cover and the aircraft surface.

The **Extended Canopy Cover** takes our standard Canopy Cover design and extends it down to the wing root to overlap with the Wing Covers, an Engine Cover and an Empennage Cover. It is designed to cover the entire door. To ensure the most secure fit, high-quality shock cord is sewn in the hem of the cover. This chord is also adjustable for tightness. This is the Canopy Cover you would need as part of a full cover set.

This cover type is made from Silver Acrylic Sunbrella canvas and is 100% lined with a soft and smooth microfiber. Bruce's Custom Covers developed this material combination especially for aircraft protection. The outer material is medium weight and treated for water resistance, UV resistance and anti-static buildup. The inner lining is a very soft and smooth microfiber to prevent scratching. The material is very reflective, and tests show that the cabin interior temperature can be reduced to near-ambient temperature on the hottest of days. It is water, ice and snow repellent, yet breathable to allow moisture to escape from between the cover and the aircraft surface.

Recommended fly-away kit: Canopy Cover, Engine Inlet Plugs & Pitot Cover

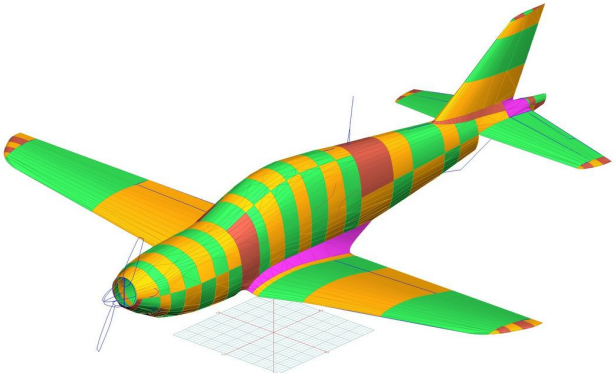

Pelegrin Tarragon Complete Cover, 3D model

Description	Part Number	Price
CANOPY COVER	**SE1-000**	**$460.00**
COMPLETE COVER	**SE1-001**	**$2120.00**
EXTENDED CANOPY COVER	**SE1-002**	**$545.00**
CANOPY/ENGINE COVER	**SE1-010**	**$600.00**

Section 2: Engine/Prop Covers

Engine Covers will cinch around or behind the spinner, cover the entire engine cowl area including the engine air cooling and induction air inlets, and fastens together with Velcro beneath the spinner down the front of the cowling. The Engine Cover is attached with a belly strap aft of the firewall, and can Velcro to the Canopy Cover. Engine Covers are normally made from Solution-Dyed Polyester or Acrylic *Sunbrella*. An Insulated version of the engine cover can be made with a thicker, quilted, and water-repellent material. The Insulated Engine Cover works well in cold climates to help with engine preheating.

FOR INTERIOR USE - Protect your airplane's engine inside a cold winter hangar with our reasonably priced **Insulated Hangar Blanket**. While not as form fitting as our custom fit insulated engine covers, the **Hangar Blanket** will work wonders to help protect your engine when used with a heating device. AVAILABLE IN RED OR BLACK.

Insulated Covers Material - A special composite material of solution-dyed polyester, 3M Thinsulate insulation, and soft nylon interior fabric. Our insulated covers are designed to complement an engine preheater and help retain heat in the engine compartment after shutdown. If you operate your aircraft in cold-weather, these covers will help prevent engine wear and tear.

Sorry, custom flaps and preheater access is not available on the hangar blanketThe **Spirit Engineering SE-1 Insulated Engine Cover** works well in cold climates to help with engine preheating. You can add an access flap for an additional fee. It will cinch around or behind the spinner, cover the entire engine cowl area including the engine air inlets, and fastens together with Velcro beneath the spinner down the front of the cowling.

Insulated Covers Material - A special composite material of solution-dyed polyester, 3M Thinsulate insulation, and soft nylon interior fabric. Our insulated covers are designed to complement an engine preheater and help retain heat in the engine compartment after shutdown. If you operate your aircraft in cold-weather, these covers will help prevent engine wear and tear.

The **Spirit Engineering SE-1 Propeller Cover** is a one-piece design that form fits to the blades and spinner. The prop cover slips over the blades and spinner and is attached by a plastic all-weather zipper on the bottom of the blades. Propeller covers can be made for multiple numbers of blades, and for wooden, composite or metal props. The Propeller Cover is normally made from Acrylic *Sunbrella* or Solution-Dyed Polyester and is lined 100% with a soft and smooth microfiber. **Insulated Propeller Covers** works well in cold climates to help with engine preheating. These insulated versions are made with a thicker, quilted, water-repellent, and breathable material.

This cover type is made from Silver Acrylic Sunbrella canvas and is 100% lined with a soft and smooth microfiber. Bruce's Custom Covers developed this material combination especially for aircraft protection. The outer material is medium weight and treated for water resistance, UV resistance and anti-static buildup. The inner lining is a very soft and smooth microfiber to prevent scratching. The material is very reflective, and tests show that the cabin interior temperature can be reduced to near-ambient temperature on the hottest of days. It is water, ice and snow repellent, yet breathable to allow moisture to escape from between the cover and the aircraft surface.

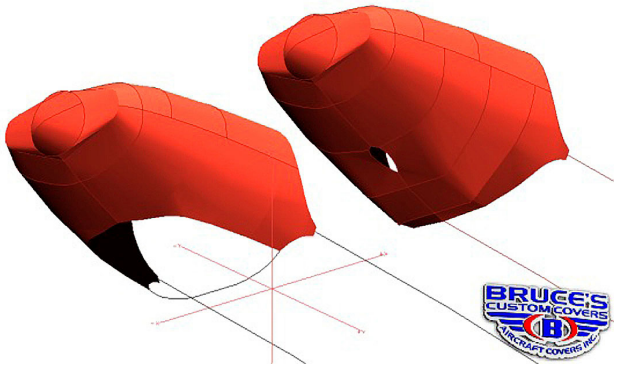

Lancair Insulated Engine Covers, fully and partially enclosed, 3D models

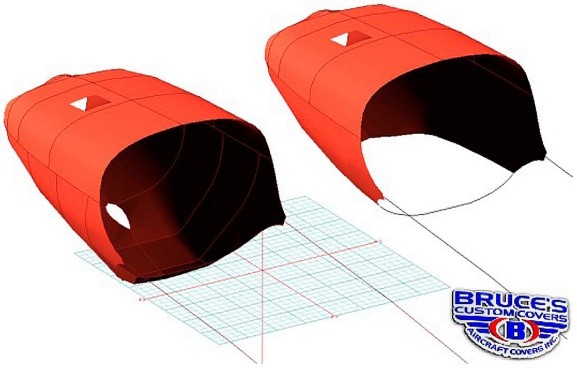

Lancair Insulated Engine Covers, fully and partially enclosed, 3D models

Description	Part Number	Price
PROPELLOR/SPINNER COVER, 2 blade	**SE1-115**	**$175.00**
INSULATED PROPELLOR/SPINNER COVER, 2 Blade	**SE1-117**	**$235.00**

ENGINE COVER	**SE1-120**	**$340.00**
INSULATED ENGINE COVER	**SE1-125**	**$460.00**
INSULATED HANGAR BLANKET, INTERIOR USE	**SE1-HB2**	**$300.00**

Section 3: Plugs & Protection

Spirit Engineering SE-1 Pitot Tube Covers, NOT HEAT RESISTANT TYPE, are made of Naugahyde vinyl, and are designed to cover the entire pitot assembly. Slipping over the tube, the cover tightens around the base with a Velcro strap detail. A "Remove Before Flight" streamer is attached to the cover. **Heat Resistant Pitot Covers** are an upgrade to this design, and help prevent the pitot cover from melting onto the tube if the pitot heat is accidentally turned on while installed. If you want the set tethered together, please let us know.

Engine Inlet Plugs are custom fit for your Spirit Engineering SE-1 intakes, made with heavy-duty vinyl material, and stuffed with a single block of sculpted urethane foam. Each plug has a zipper that allows the foam to be removed and dried if necessary. Engine plugs have warning flags that are visible from the cockpit or 'remove before flight' streamers sewn onto the face of the plugs. Most plugs are imprinted with the aircraft registration number in black for an extra charge. Storage bag NOT included. Engine plugs may be inserted after flight when the engine is still warm. **Engine Inlet Plugs are commonly referred to as Cowl Plugs, Intake Plugs, Cowl Blocks, Engine Blocks, and Engine Bungs.**

Pitot Cover

Lancair 320 Engine Inlet Plugs

Description	Part Number	Price
ENGINE INLET PLUGS (set of 2)	**SE1-100**	**$190.00**
PITOT COVER	**SE1-HPX**	**$35.00**

Section 4: Wing/Tail/Empennage Covers

Horizontal Stabilizer Covers are a perfect solution to protect your paint from sun damage and prevent frost, snow, ice buildup, and corrosion. They are made from Solution-Dyed Polyester or Acrylic *Sunbrella*. They cover the entire upper surface of the stabilizers and overlap around the leading and trailing edges as well as the wing tip. The covers secure under each stabilizer with adjustable straps. In some instances, cut-outs are made in the trailing edge of the wing covers to accommodate for static wicks. **Horizontal Stabilizer Covers** for winter use or long-term all year use are usually available, and are normally made from Solution-Dyed Polyester or Acrylic *Sunbrella*. A Hail Protection version can be made which incorporates dense closed cell foam into the entire upper surface of the wing covers to help prevent hail damage. Although these covers are bulky, they do help protect your wing and control surfaces against small to medium-size hail.

ALL-YEAR USE MATERIAL - Made with Silver Acrylic Sunbrella canvas, the all-year use material is the best option for sun protection and cover longevity. This heavier more durable material is intended for all weather conditions, such as rain and snow or lots of sun.

WINTER USE MATERIAL - Made with Solution-Dyed Polyester fabric, this option is intended for seasonal use to aid in deicing, rain mitigation, or for occasional travel. The material is lighter and more compact, but more susceptible to UV damage and may have a shorter useful life if used continuously outside than the all-year use material.

The **Spirit Engineering SE-1 Empennage Cover** is a complete, one-piece cover which covers both the vertical and horizontal stabilizers, as well as the tailboom. It is normally made from *Solution-Dyed Polyester* or *Acrylic Sunbrella*. The cover attaches with adjustable straps underneath the belly. The cover is pulled back over the vertical stabilizer and a plastic all-weather zipper is closed at the trailing edge of the rudder. The cover is then stretched over the elevators and zippered closed along the bottom outboard elevator surfaces. The covers cinch under the horizontal stabilizers using adjustable straps. All antennas, beacons and static wicks, if applicable, are accounted for in the design.

ALL-YEAR USE MATERIAL - Made with Silver Acrylic Sunbrella canvas, the all-year use material is the best option for sun protection and cover longevity. This heavier more durable material is intended for all weather conditions, such as rain and snow or lots of sun.

WINTER USE MATERIAL - Made with Solution-Dyed Polyester fabric, this option is intended for seasonal use to aid in deicing, rain mitigation, or for occasional travel. The material is lighter and more compact, but more susceptible to UV damage and may have a shorter useful life if used continuously outside than the all-year use material.

The **Spirit Engineering SE-1 Wing Covers** are a perfect solution to protect your paint from sun damage and prevent winter frost, snow, ice buildup, and corrosion. They are made from Solution-Dyed Polyester or Acrylic *Sunbrella* and form-fit to slip around each wing tip, cover the entire upper surface of the wing and wrap around the leading and trailing edges. The covers secure under the wing with adjustable straps from the trailing edge to the leading edge. The wing covers can also attach to each other with adjustable straps at the leading and trailing edges of the wing under the belly of the plane. In some instances, cut-outs are made in the trailing edge of the wing covers to accommodate static wicks. We have the ability to also accommodate wing tip modifications, such as STOL kits, droop tips, and vortex generators. Wing covers are labeled LEFT and RIGHT for your convenience. Wing Covers are available for winter use or long-term, all-year use. A Hail Protection version can be made which incorporates very dense closed cell foam into the entire upper surface of the wing covers to help prevent hail damage. Although these covers are bulky, they do help protect your wing and control surfaces against small to medium-size hail.

ALL-YEAR USE MATERIAL - Made with Silver Acrylic Sunbrella canvas, the all-year use material is the best option for sun protection and cover longevity. This heavier more durable material is intended for all weather conditions, such as rain and snow or lots of sun.

WINTER USE MATERIAL - Made with Solution-Dyed Polyester fabric, this option is intended for seasonal use to aid in deicing, rain mitigation, or for occasional travel. The material is lighter and more compact, but more susceptible to UV damage and may have a shorter useful life if used continuously outside than the all-year use material.

Lancair ES Wing Covers & Empennage Cover (sold separately)

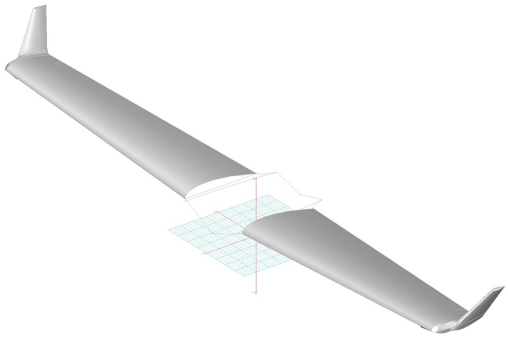

Lancair IV Wing/Winglet Covers (3D Model)

Description	Part Number	Price
WING COVERS, WINTER USE (set of 2)	**SE1-200**	**$480.00**
WING COVERS, ALL YEAR USE (set of 2)	**SE1-205**	**$650.00**

HORIZONTAL STABILIZER COVERS, WINTER USE (set of 2)	**SE1-300**	**$155.00**
HORIZONTAL STABILIZER COVERS, ALL YEAR USE (set of 2)	**SE1-305**	**$240.00**
EMPENNAGE COVER (Tailboom, Vertical & Horiz Stabilizers), WINTER USE	**SE1-405**	**$610.00**
EMPENNAGE COVER (Tailboom, Vertical & Horiz Stabilizers), ALL YEAR USE	**SE1-410**	**$740.00**

Section 7: Light Weight Products: Travel Covers and FlyAway Covers

The **Spirit Engineering SE-1 Canopy/Engine Cover** is a one-piece cover (100% lined with microfiber) that is a combination of the Canopy Cover and Engine Cover. This cover will enclose the engine cowl and will extend aft to cover all of the windows. This cover type is made from Silver Acrylic Sunbrella canvas and is 100% lined with a soft and smooth microfiber. Bruce's Custom Covers developed this material combination especially for aircraft protection. The outer material is medium weight and treated for water resistance, UV resistance and anti-static buildup. The inner lining is a very soft and smooth microfiber to prevent scratching. The material is very reflective, and tests show that the cabin interior temperature can be reduced to near-ambient temperature on the hottest of days. It is water, ice and snow repellent, yet breathable to allow moisture to escape from between the cover and the aircraft surface.

The **Lightweight Travel Canopy Cover** will cover the same area as our standard Canopy Cover, but the material used is very lightweight and will fold up and store in a much smaller space. This cover is ideal for the airplane that is stored in a hangar full-time and only needs a cover on rare occasions.

Travel Covers are made with Silver Solution-Dyed Polyester fabric and only lined over the windshield to save weight. The material is lightweight and more compact for easy stowage in the aircraft. The polyester material is water resistant, but only intended for occasional use outside. We also have an ultra lightweight material available for fitted hangar dust covers. For daily outdoor use, the non-travel Sunbrella Cover is the best choice.

Blackshape Prime Travel Cover, Light Weight Travel Canopy Cover

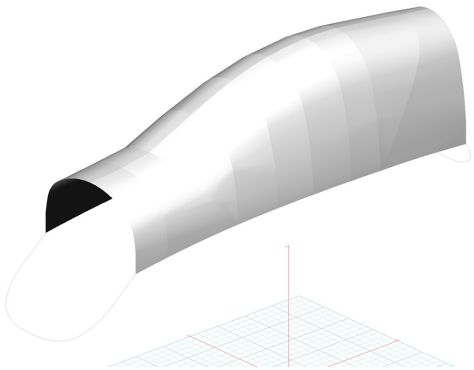

Blackshape Prime Canopy Cover, 3D model

Description	Part Number	Price
TRAVEL COVER, Light Weight Canopy Cover	**SE1-800**	**$365.00**
TRAVEL COVER, Light Weight Canopy/Engine Cover	**SE1-810**	**$485.00**

Section 10: Inside the Hangar

Some high value aircraft end up logging lots of hangar time, and become dust magnets in the process. A high quality, well fitting dust cover provides easy assurance that the aircraft's surfaces remain clean and free of grit and grime. Available in a large variety of colors, each dust cover is custom made according to aircraft details and customer preferences. Fire retardant fabrics are also available.

Description	Part Number	Price

HANGAR DUST COVER, includes propellor cover (set of 2)	**SE1-DUST**	**$1150.00**

Prices subject to change. Other Covers and Design Alterations: Prices on request.
Prices are FOB Morgan Hill, CA. Sales tax on orders shipped to California addresses. Orders take approximately 3 weeks to complete. For domestic orders we normally ship by UPS ground service. Next day shipping and air parcel post is available on request. We can take payment by Visa, Mastercard, American Express, or Discover.

Bruce's Custom Covers offers protective covers and plugs for virtually every type of airplane, jet and helicopter. If you have questions about our products please call any time TOLL FREE: 800/777-6405, or FAX: 408/738-2729.

BRUCE'S CUSTOM COVERS

A division of Aircraft Covers, Inc.

18850 Adams Ct.
Morgan Hill, CA 95037
www.AircraftCovers.com

Aircraft Cover Ordering Form

Customer Info

Name _____

Shipping Address _____

_____

Phone & Email _____

Payment

Credit Card Number ☐☐☐☐☐☐☐☐☐☐☐☐☐☐☐☐

Exp. Date ☐☐ / ☐☐ V-Code* ☐☐☐☐

**Visa, Mastercard, Discover: last 3 numbers on back of card, right of signature. Amex: 4 smaller numbers printed on face of card.*

A/C Info

Reg / Tail Number: _____ Aircraft Type: _____ Year: _____

Colors / Paint Scheme (be specific): _____

Please specify below the items you would like to order.

See technical sheet or visit our website for part numbers (or just fill in the description)

	Part Number	Quant	Description	Price
1				
2				
3				
4				
5				
6				
7				
8				
9				
10				
			TOTAL	

Optional Items (check the box of the item you want)

☐ ***Imprint** aircraft registration number onto both sides of canopy cover.....$35.00*

☐ ***Imprint** aircraft registration number onto Jet intake covers.....$55.00*

Ph: 408/738-3959 • Toll Free: 800/777-6405 • Fax: 408/738-2729 • bruce@aircraftcovers.com